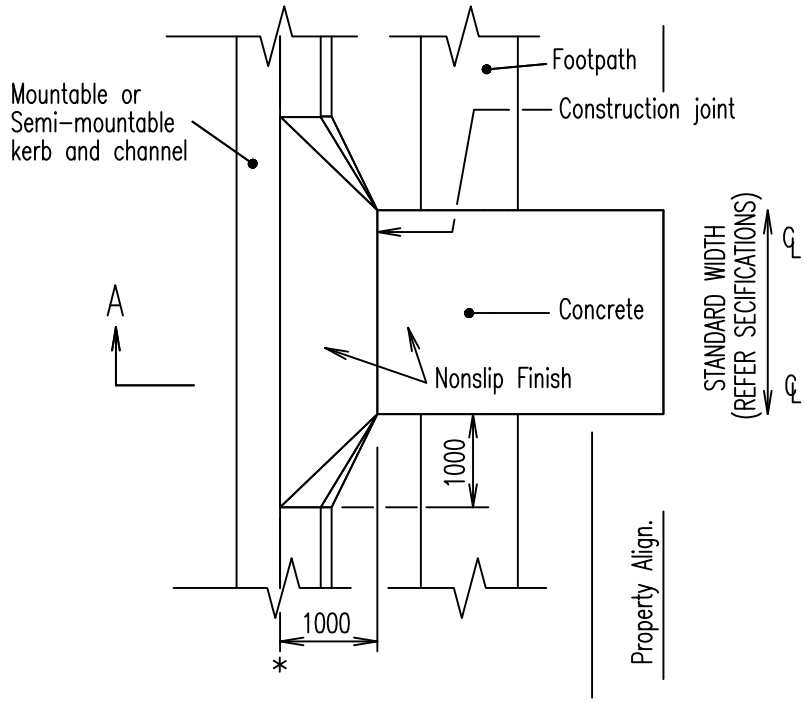


SLABS ABUTTING MOUNTABLE & SEMI-MOUNTABLE KERB & CHANNEL

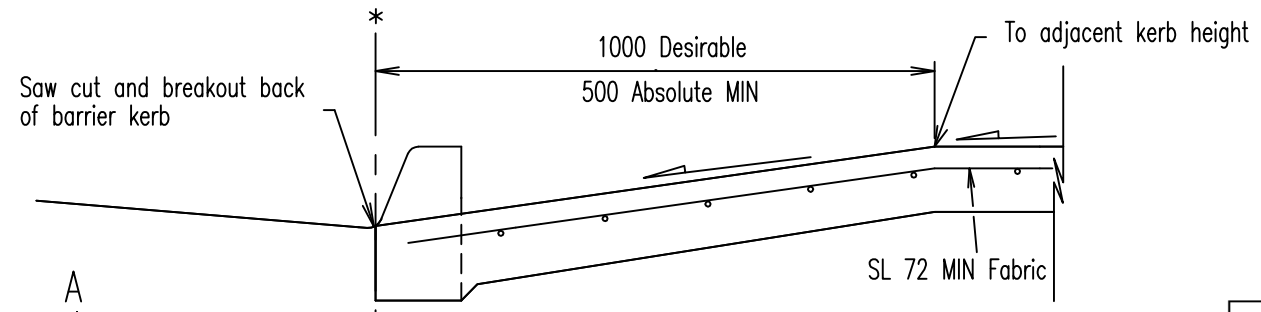


TYPE 1
BARRIER KERB – BREAKOUT

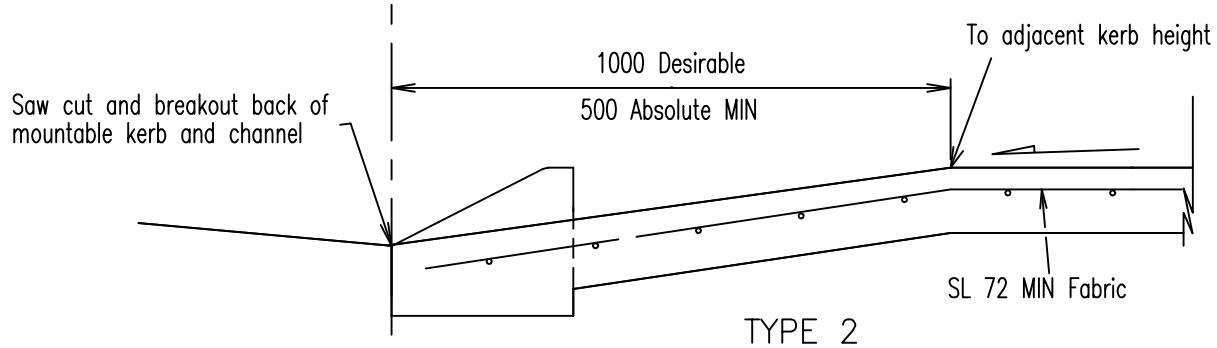


TYPE 2
SEMI-MOUNTABLE KERB – BREAKOUT

LEGEND
* NOM. kerb line.

| | Concrete strength | Slab thickness | Reinforcing |
|---|---|---|---|
| Residential crossover | 25 Mpa | 150 mm | SL72 |
| Rural crossovers | 25 Mpa | 200 mm | SL72 |
| Commercial crossover | 25 Mpa | 200 mm | SL72 |

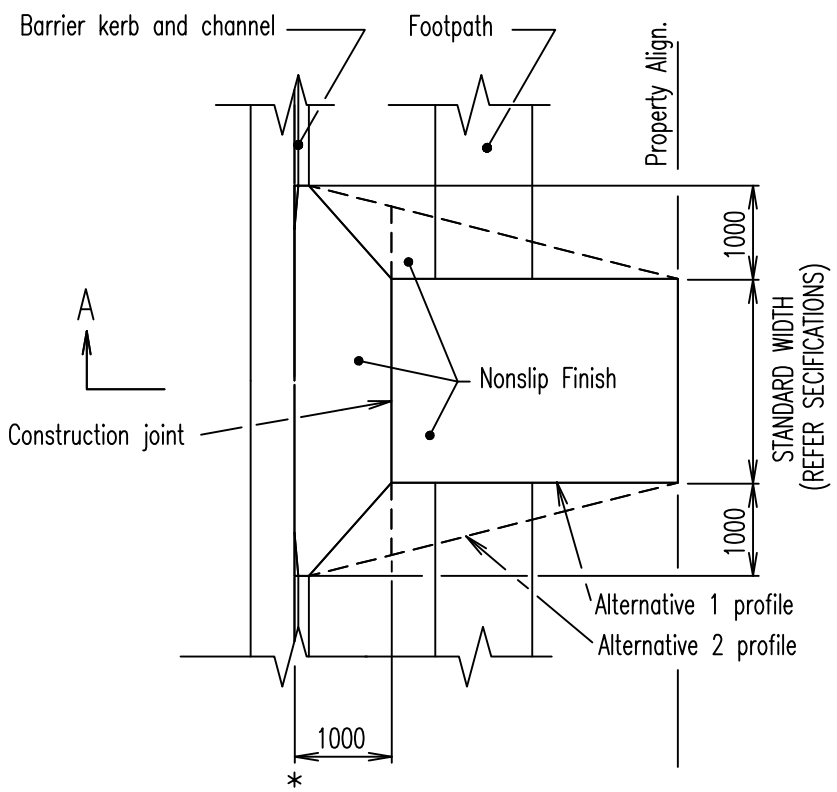


SLAB ABUTTING CHANNEL INVERT BARRIER KERB AND CHANNEL

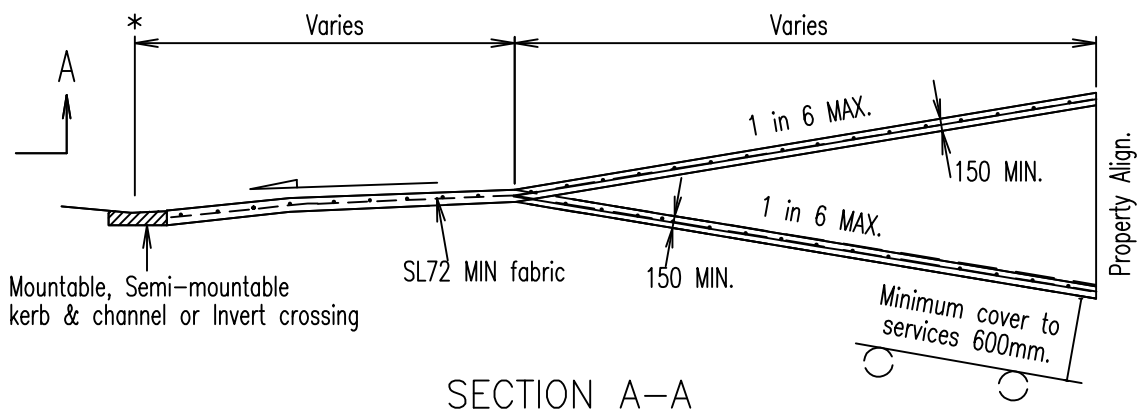


SECTION A–A

NOTES:

1. Footpath section to vary where necessary to match concrete footpaths and verge profiles. Footpath earthworks adjoining concrete must be well compacted.
2. Concrete surface tolerance to be +–5mm
3. Concrete N25 in accordance with AS 1379 and AS 3600.
4. Reinforcement fabric to AS 1304, centrally placed , 50mm cover to edge, lap fabric 250 mm minimum.
5. Approved materials for construction :– Concrete
6. Expansion joints to be 10 thick, full depth closed cell cross linked polyethylene foam (85 – 150 kg/m ) or 10mm thick compressed granulated corkboard, installation to manufactures' instructions.
7. A crossover application must be obtained from the Shire. Seek approval of location and levels prior to excavation.
8. Grade not to exceed 1 in 8 where disability access is required.
9. All dimensions in millimetres.

| | | |
|---|---|---|
| A | ORIGINAL ISSUE | 21/01/16 |
| REVISIONS | | DATE |

Copyright
"This document is the property of Shire Of Wydham East Kimberely The document may only be used for the purpose for which it was commissioned & in accordance with the terms of engagement for the commission. Unauthorised use of this document in any way is prohibited."

SCALE: NOT TO SCALE

DESIGNED NAVNEET RAHEJA
DRAWN NAVNEET RAHEJA
CHECKED D KLYE
APPROVED

SHIRE OF WYNDHAM, EAST KIMBERLEY

CROSSOVER
Standard Drawing

A